OIL FIRED UPFLOW FURNACE SPECIFICATIONS

MODEL NO.	OH6FX072DV4R			
HEATING CAPACITY	LOW CAPACITY		HIGH CAPACITY	
	Low Fire	High Fire	Low Fire	High Fire
HEAT INPUT RATE (BTUH)	70,000	85,000	85,000	106,250
OUTPUT BTUH[1]	61,500	72,000	74,000	89,000
SEASONAL EFFICIENCY[2]	87.0		86.4	
LARGEST REC A/C[3]	4 tons		4 tons	
NOMINAL TEMP RISE	66º	66º	66º	66º
HEAT EXCHANGE AREA				
CASING HEIGHT (IN.):	45”			
CASING WIDTH (IN.):	20”			
CASING DEPTH (IN.):	30”			
NOMINAL FLUE OUTLET DIA.	5"			
APPROX SHIPPING WEIGHT	250 lbs.			
APPROVAL AGENCY	U.L.			
QTY AND SIZE OF PERMANENT FILTERS	(1) 24-3/4” x 15-3/4”			
ELECTRICAL REQUIREMENTS	120 / 60 / 1			
MAX FUSE SIZE ECM	15			
TOTAL CURRENT (AMPS) ECM	12.1			
HEIGHT FROM FLOOR TO CENTER OF FLUE (FRONT FLUE) (REAR FLUE)	40 ¾”			
SUPPLY AIR OUTLET SIZE (W-IN. X D-IN.)	18” x 19” (20” X 20”) [5]			
RETURN AIR DUCTWORK CONNECTION FLANGE SIZE ON FILTER RACK (D-IN. X H-IN.)	24-1/2” x 15”			
RETURN AIR INLET OPENING SIZE IN SIDE CASING TO BE CUT-OUT BY DEALER (D-IN. X H-IN.)	23” X 14”			
	ACCESSORY ITEMS			
BLOCKED VENT KIT[4]	AOPS2687			

- SEE NEXT PAGE FOR MORE DATA -

1 OUTPUT BTUH BASED ON ANNUAL FUEL UTILIZATION EFFICIENCY RATED BY MANUFACTURER.
2 SEASONAL EFFICIENCY (ALSO CALLED AFUE - ANNUAL FUEL UTILIZATION EFFICIENCY) RATINGS ARE BASED ON TESTS FOLLOWING U.S. DEPARTMENT OF ENERGY TEST PROCEDURES.
3 TO PERMIT LARGEST RECOMMENDED AIR CONDITIONING (AT .5 STATIC PRESSURE), SELECTION OF THE HIGHEST MOTOR SPEED IS REQUIRED.
4 NOT TO BE USED IN SIDEWALL VENT APPLICATION, USE ONLY WHEN CHIMNEY VENTED.
5 PLENUM ADAPTERS INCLUDED WITH UNIT MUST BE INSTALLED FOR 20"x20" PLENUM.

Model Number Digit	1	2	3	4	5	6	7	8	9	10	11	12
	Fuel	Configuration	Heat Exchanger Identifier	Flue	Design Change	Capacity	Capacity	Capacity	Blower Type	Clg Airflow Cap.	Clg Airflow Cap.	Burner
Oil Furnace Model Nomenclature Example Model Numbers	**O**	**H**	**6**	**F**	**X**	**0**	**7**	**2**	**D**	**V**	**4**	**R**
O = Oil	**O**											
H = Highboy		**H**										
6 = Heat Exchanger Size Identifier			**6**									
F = Front				**F**								
X= 2 Stage					**X**							
Heating Capacity MBTUH (000's) with factory installed nozzle						**0**	**7**	**2**				
D = Direct Drive									**D**			
Clg. Airflow Variable Speed (ECM) V4= 4tons										**V**	**4**	
R = Riello												**R**

- SEE NEXT PAGE FOR MORE DATA -

OIL FIRED UPFLOW FURNACE SPECIFICATIONS

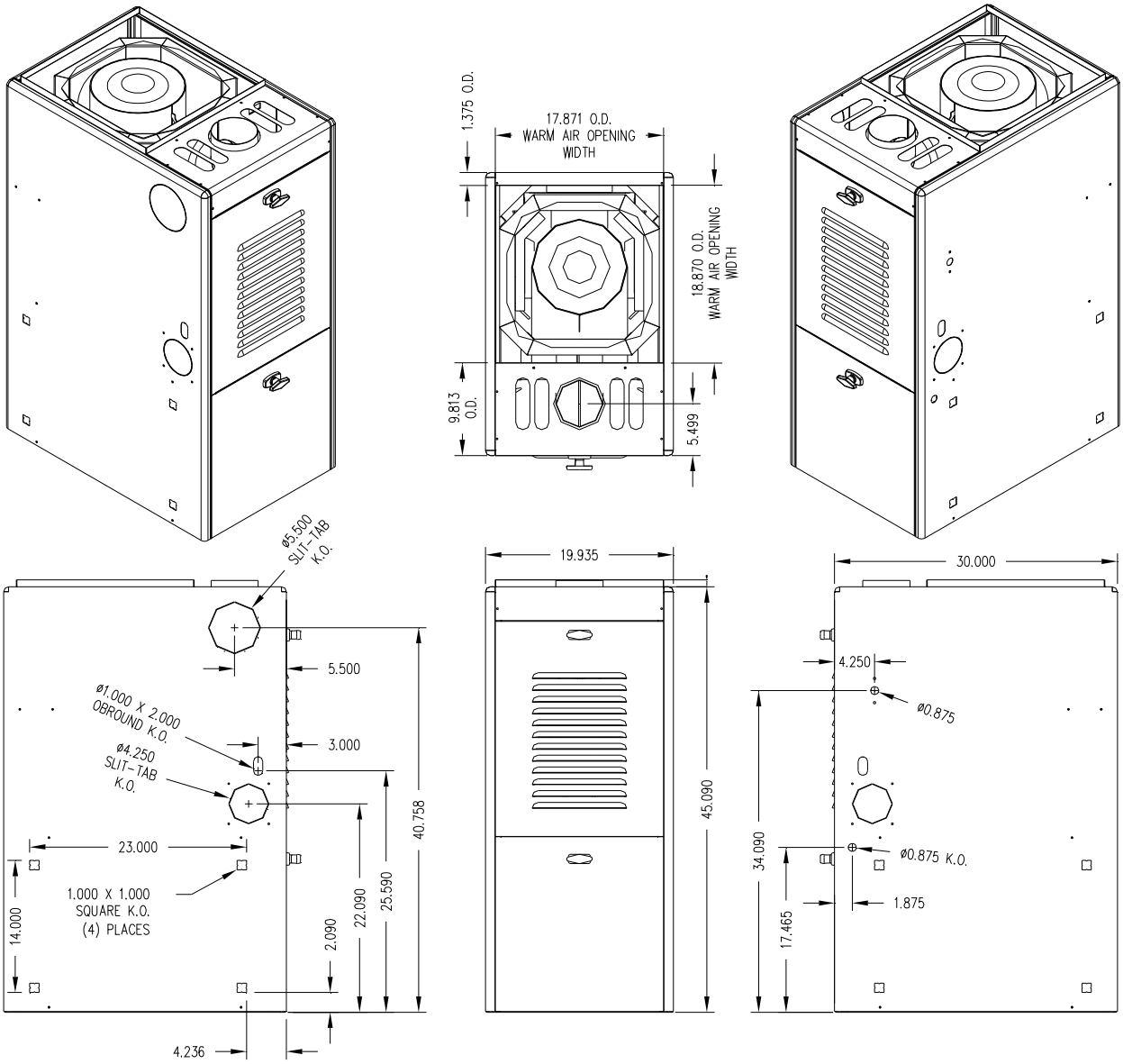

FILTER RACK SPECIFICATIONS

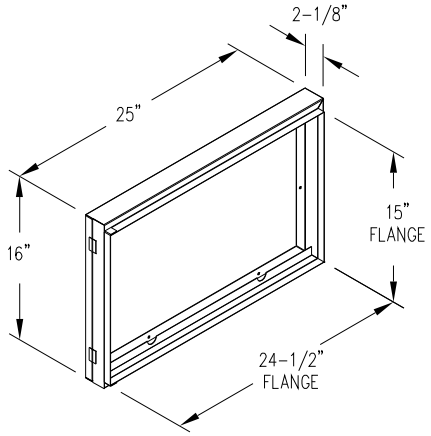

- SEE NEXT PAGE FOR MORE DATA -

OIL FIRED UPFLOW FURNACE SPECIFICATIONS

BLOWER DATA:	OH6FX072DV4
BLOWER MODEL[1]	DD 100-9R
MOTOR H.P.	¾ HP Variable Speed
MOTOR TYPE	ECM
HIGH SPEED AIRFLOW (SCFM) @ 0.5 IN. W.G. EXTERNAL STATIC PRESSURE:	1600
Diameter x Width	10 x 9

BURNER DATA	RIELLO "G5D"	
AIR TUBE LENGTH (IN.)	4 ¼"	
BURNER HEAD TYPE:	Fixed	
FUEL TYPE:	#2	
NOZZLE RATING (GPH):	70-45° W	50-45° W
SPRAY ANGLE (DEG.):	45°	45°
SPRAY PATTERN:	W	W
OIL PUMP PRESSURE (PSIG):	130 / 170	130 / 170
COMBUSTION CHAMBER TYPE:	REFRACTORY (SOFT CHAMBER)	

CLEARANCES	
	MINIMUM CLEARANCES TO COMUSTIBLE MATERIALS:
SIDES	0"
FRONT (SERVICE ACCESS)	(Clearance to Combustibles) 6"/ 24" (Service)
REAR	0"
FLUE	7"
TOP PLENUM	1"
SIDES PLENUM	1"

1 DD = DIRECT DRIVE

- SEE NEXT PAGE FOR MORE DATA -

OIL FIRED DOWNFLOW FURNACE SPECIFICATIONS

HEATING AIR FLOW / TEMPERATURE RISE

			LOW CAPACITY		HIGH CAPACITY	
	FAN CONTROL SW 1 SWITCH SETTINGS	**BTUH**	**LOW FIRE 60,000**	**HI FIRE 72,000**	**LOW FIRE 72,000**	**HI FIRE 90,000**
		HEATING CFM	**APPROX. CFM/RISE (ºF)**	**APPROX. CFM/RISE (ºF)**	**APPROX. CFM/RISE (ºF)**	**APPROX. CFM/RISE (ºF)**
	3 – OFF 2 – OFF 1 – OFF	740	592 / 94º	740 / 90º	592 / 113º	740 / 113º
	3 – OFF 2 – OFF 1 – ON	812	650 / 85º	812 / 82º	650 / 103º	812 / 103º
	3 – OFF 2 – ON 1 – OFF	883	706 / 79º	883 / 75º	706 / 94º	883 / 94º
	3 – OFF 2 – ON 1 – ON	968	744 / 72º	968 / 69º	774 / 86º	968 / 86º
	3 – ON 2 – OFF 1 – OFF	1054	843 / 66º	1054 / 63º	843 / 79º	1054 / 79º
	3 – ON 2 – OFF 1 – ON	1153	922 / 60º	1153 / 58º	922 / 72º	1153 / 72º
FACTORY SW1 SWITCH SETTINGS	3 – ON 2 – ON 1 – OFF	1267	1013 / 55º	1267 / 53º	1013 / 66º	1267 / 66º
	3 – ON 2 – ON 1 – ON	1424	1139 / 49º	1424 / 47º	1139 / 59º	1424 / 59º

= Recommended heating speed setting

Cooling Speed set-ups

			Air Flow	
	Fan Control SW 1 Switch Settings	**Clg. Tonage**	**Cool**	**Continous**
	6-OFF 5-OFF 4-OFF	**2**	**799**	**500**
	6-OFF 5-OFF 4-ON	**2.5**	**1017**	**508**
	6-OFF 5-ON 4-OFF	**3**	**1210**	**605**
	6-OFF 5-ON 4-ON	**3.5**	**1404**	**702**
FACTORY SW1 SWITCH SETTINGS	**6-ON 5-OFF 4-OFF**	**4**	**1622**	**799**